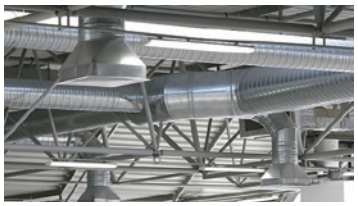

- ✓ *Energy Saving*
- ✓ *Low Noise*
- ✓ *Environmental Friendly*
- ✓ *IEC Dimension*
- ✓ *Low Vibration*
- ✓ *European Design*

WES®

SERIES (IE1)

THREE PHASE STANDARD EFFICIENCY
INDUCTION CAST IRON MOTORS

WONDER ELECTRIC MOTOR (S) PTE LTD

WES SERIES (IE1)

THREE PHASE STANDARD EFFICIENCY INDUCTION CAST IRON MOTORS

WES series motor is three phase standard efficiency induction cast iron motor. It's the new replacement of WY series and its efficiency indicators are in compliance with IE1. Compared with WY series, WES series motor boasts the advantages of high efficiency and high starting torque, with lower noise, optimized structure and artistic outline.
The rated output and the mounting dimensions are fully conformed to the standard IEC and DIN 42673 (the same as WY series), WES series motors are suitable for driving various machines or equipments without special requirements.

Characteristics for all WES standard 3-Phase asynchronous motors

* Widely applied in general machinery and industries such as pumps & water treatment, road machinery, petroleum, chemical, metallurgy, cement and paper-milling.
* IP55 protection, Class F Insulation, B Temperature rise, S1 duty
* Rated voltage 380V, 400V, 415V, 440V, 460V and 480V
* Rated frequency 50Hz and 60Hz
* Operation conditions: ambient temperature: -20°C ~ 40°C, altitude ≤ 1000m
* Y-connection for motors up to 3KW
* Δ-connection for motors of 4KW and above
* Cooling method is IC411

MOUNTING ARRANGEMENTS

Types	Basic Type of Construction	Derived Types of Construction				
WES 80 - 400	IM B3 IM 1001	IM V5 IM 1011	IM V6 IM 1031	IM B6 IM 1051	IM B7 IM 1061	IM B8 IM 1071
WES 80 - 400	IM B35 IM 2001	IM V15 IM 2011	IM V36 IM 2031	* IM 2051	* IM 2061	* IM 2071
WES 80 - 160	IM B34 IM 2101	* IM 2111	* IM 2131	* IM 2151	* IM 2161	* IM 2171
WES 80 - 400	IM B5 IM 3001	IM V1 IM 3011	IM V6 IM 3031			
WES 80 - 160	IM B14 IM 3601	IM V18 IM 3611	IM V19 IM 3631			

Basic types of construction may be used in all derived types of construction
(*) non-defined mounting by IEC 60034-7
1) for IM V6, IM B6, IM B8 types of construction, inquiry is necessary.

CONNECTION DIAGRAM AND PROTECTION - WES SERIES

Connection Diagrams (Three Phase Motors with Cage Rotor)

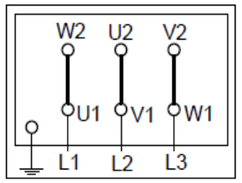

Delta Connection

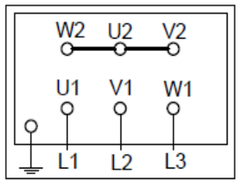

Star Connection

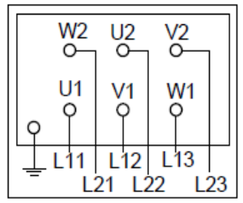

Connection to Star-Delta Starter

Multi-speed motors in Dahlander connection (Tapped winding)

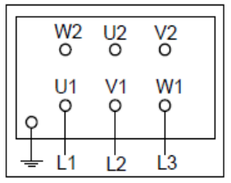

Low Speed

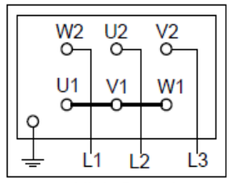

High Speed

Multi-speed motors with 2 separate windings

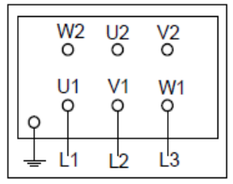

Low Speed

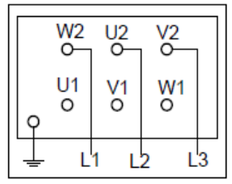

High Speed

All motors comply to the international standard IEC60034-5. This standard specifies the Degree of Protection of each electric equipment, commonly known as the "IP" code. See table below

Designation of Protection (IEC60034-5)

Designation	First Numeral	Second Numeral
	Protection against contact and ingress of foreign bodies, Protection against hazardous "Live" parts and moving mechanical parts.	Protection against water
	5. Ingress of dust is not totally prevented, but dust shall not interfere with the satisfactory operation of equipment. A probe of 1mm diameter shall not penetrate the enclosure.	5. Water projected in jets against the enclosure from any direction will have no harmful effects.
	6. No ingress of dust.	6. Water projected in power jets shall have no harmful effects.
IP55	Dust protected	Jetting water
IP56	Dust protected	Powerful jetting
IP65	Dust tight	Jetting water
IP66	Dust tight	Powerful jetting

TECHNICAL SPECIFICATIONS - WES SERIES 2 Poles 50Hz IE1

Motor Type	Rated Power		Current (IFL) /A			Rated Speed	Full load Efficiency	Power Factor	IST/ IFL	TST/ TFL	TM/ TFL	TFL	Moment of Inertia J	Weight
2 Poles 50Hz	KW	HP	380V	400V	415V	r/min	%	cos ϕ	Ratio			N.M	Kgm^2	Kg
WES-80M1-2	0.75	1	1.83	1.74	1.68	2835	75.0	0.83	7.1	2.2	2.3	2.5	0.00085	16
WES-80M2-2	1.1	1.5	2.58	2.45	2.37	2835	77.0	0.84	7.0	2.2	2.3	3.7	0.0011	17
WES-90S-2	1.5	2	3.43	3.26	3.14	2840	79.0	0.84	6.4	3.1	3.3	5.0	0.00146	22
WES-90L-2	2.2	3	4.85	4.61	4.45	2855	81.0	0.85	6.2	3.2	3.4	7.4	0.00185	25
WES-100L-2	3	4	6.31	6.00	5.78	2867	83.0	0.87	7.5	2.2	2.3	10.0	0.00325	33
WES-112M-2	4	5.5	8.12	7.72	7.44	2862	85.0	0.88	7.5	2.2	2.3	13.3	0.0055	40
WES-132S1-2	5.5	7.5	11.04	10.49	10.11	2890	86.0	0.88	7.5	2.2	2.3	18.2	0.01378	59
WES-132S2-2	7.5	10	14.9	14.1	13.6	2890	87.0	0.88	7.5	2.2	2.3	24.8	0.01456	62
WES-160M1-2	11	15	21.2	20.2	19.5	2925	88.4	0.89	7.5	2.2	2.3	35.9	0.0442	107
WES-160M2-2	15	20	28.6	27.2	26.2	2931	89.4	0.89	7.5	2.2	2.3	48.9	0.0549	117
WES-160L-2	18.5	25	34.7	33.0	31.8	2938	90.0	0.90	7.5	2.2	2.3	60.1	0.0654	134
WES-180M-2	22	30	41.0	39.0	37.6	2951	90.5	0.90	7.5	2.0	2.3	71.2	0.0955	169
WES-200L1-2	30	40	55.4	52.6	50.7	2952	91.4	0.90	7.5	2.0	2.3	97.1	0.153	220
WES-200L2-2	37	50	67.9	64.5	62.2	2950	92.0	0.90	7.5	2.0	2.3	119.8	0.173	239
WES-225M-2	45	60	82.1	78.0	75.2	2962	92.5	0.90	7.5	2.0	2.3	145.1	0.268	297
WES-250M-2	55	75	99.8	94.8	91.4	2966	93.0	0.90	7.5	2.0	2.3	177.1	0.365	377
WES-280S-2	75	100	135.3	128.5	123.9	2974	93.6	0.90	7.5	2.0	2.3	240.8	0.601	510
WES-280M-2	90	125	160.0	152.0	146.5	2961	93.9	0.91	7.5	2.0	2.3	290.3	0.683	540
WES-315S-2	110	150	195.4	185.6	178.9	2974	94.0	0.91	7.1	1.8	2.2	353.2	1.408	920
WES-315M-2	132	180	233.2	221.6	213.5	2972	94.5	0.91	7.1	1.8	2.2	424.2	1.558	970
WES-315L1-2	160	215	279.3	265.4	255.8	2974	94.6	0.92	7.1	1.8	2.2	513.8	1.726	1080
WES-315L2-2	200	270	348.4	331.0	319.0	2974	94.8	0.92	7.1	1.8	2.2	642.2	1.941	1170
WES-355M-2	250	340	433.2	411.6	396.7	2985	95.3	0.92	7.1	1.6	2.2	799.8	3.296	1690
WES-355L-2	315	430	544.2	516.9	498.3	2988	95.6	0.92	7.1	1.6	2.2	1006.8	3.95	1850
WES-400M1-2	355	475	626.2	594.9	573.4	2986	95.7	0.90	7.5	1.6	2	1135.4	7.45	2850
WES-400M2-2	400	535	703.4	668.2	644.1	2988	96.0	0.90	7.5	1.7	2	1278.4	7.95	2950
WES-400M3-2	450	600	790.5	751.0	723.8	2988	96.1	0.90	7.5	1.5	2	1438.3	8.6	3200
WES-400L-2	500	670	867.8	824.4	794.6	2988	96.2	0.91	7.5	1.5	2	1598.1	9.6	3340

*** Defined by Wonder Electric Singapore**

All values of current indicated have a tolerance level of ± 3%

Efficiencies according to the indirect method of IEC 60034-2-1:2007 with stray load losses determined from measurement.

IST = Locked Rotor Current
IFL = Full Load Current
TM = Maximum Torque
TFL = Full Load Torque
TST = Locked Rotor Torque

* Data are subjected to revisions without any prior notice.

TECHNICAL SPECIFICATIONS - WES SERIES 4 POLES 50Hz IE1

Motor Type	Rated Power		Current (IFL) /A			Rated Speed	Full load Efficiency	Power Factor	IST/ IFL	TST/ TFL	TM/ TFL	TFL	Moment of Inertia J	Weight
4 Poles 50 Hz	KW	HP	380V	400V	415V	r/min	%	cos ϕ	Ratio			N.M	Kgm^2	Kg
WES-80M1-4	0.55	0.75	1.57	1.49	1.44	1410	71.0	0.75	5.2	2.4	2.5	3.7	0.00131	17
WES-80M2-4	0.75	1	2.05	1.95	1.88	1402	73.0	0.76	6.0	2.3	2.5	5.1	0.00148	18
WES-90S-4	1.1	1.5	2.85	2.71	2.61	1395	76.2	0.77	6.0	2.3	2.5	7.5	0.00212	22
WES-90L-4	1.5	2	3.67	3.49	3.37	1412	78.5	0.79	6.0	2.3	2.5	10.1	0.00287	28
WES-100L1-4	2.2	3	5.09	4.84	4.66	1431	81.0	0.81	7.0	2.3	2.5	14.7	0.00606	34
WES-100L2-4	3	4	6.73	6.39	6.16	1431	82.6	0.82	7.0	2.3	2.5	20.0	0.00779	38
WES-112M-4	4	5.5	8.80	8.36	8.06	1438	84.2	0.82	7.0	2.3	2.5	26.6	0.01176	44
WES-132S-4	5.5	7.5	11.7	11.2	10.8	1445	85.7	0.83	7.0	2.3	2.3	36.3	0.0205	61
WES-132M-4	7.5	10	15.6	14.8	14.3	1445	87.0	0.84	7.0	2.3	2.3	49.6	0.0296	73
WES-160M-4	11	15	22.5	21.4	20.6	1460	88.4	0.84	7.0	2.2	2.3	72.0	0.0724	113
WES-160L-4	15	20	30.0	28.5	27.5	1460	89.4	0.85	7.5	2.2	2.3	98.1	0.0929	133
WES-180M-4	18.5	25	36.3	34.5	33.3	1470	90.0	0.86	7.5	2.2	2.3	120.2	0.135	167
WES-180L-4	22	30	42.9	40.8	39.3	1470	90.5	0.86	7.5	2.2	2.3	142.9	0.136	181
WES-200L-4	30	40	58.0	55.1	53.1	1470	91.4	0.86	7.2	2.2	2.3	194.9	0.245	232
WES-225S-4	37	50	70.2	66.7	64.3	1475	92.0	0.87	7.2	2.2	2.3	239.6	0.39	287
WES-225M-4	45	60	85.0	80.7	77.8	1475	92.5	0.87	7.2	2.2	2.3	291.4	0.45	322
WES-250M-4	55	75	103.3	98.1	94.6	1475	93.0	0.87	7.2	2.2	2.3	356.1	0.64	385
WES-280S-4	75	100	139.9	132.9	128.1	1485	93.6	0.87	7.2	2.2	2.3	482.3	1.045	510
WES-280M-4	90	125	167.4	159.0	153.3	1485	93.9	0.87	7.2	2.2	2.3	578.8	1.396	600
WES-315S-4	110	150	201.0	190.9	184.0	1485	94.5	0.88	6.9	2.1	2.2	707.4	2.98	930
WES-315M-4	132	180	240.4	228.4	220.1	1485	94.8	0.88	6.9	2.1	2.2	848.9	3.48	1010
WES-315L1-4	160	215	287.8	273.4	263.5	1485	94.9	0.89	6.9	2.1	2.2	1029.0	3.96	1070
WES-315L2-4	200	270	359.8	341.8	329.4	1485	94.9	0.89	6.9	2.1	2.2	1286.2	4.47	1170
WES-355M-4	250	340	443.3	421.2	405.9	1490	95.2	0.90	6.9	2.1	2.2	1602.3	5.75	1720
WES-355L-4	315	430	558.6	530.7	511.5	1490	95.2	0.90	6.9	2.1	2.2	2019.0	6.79	1870
WES-400M1-4	355	475	632.6	601.0	579.2	1490	95.8	0.89	6.5	1.6	2.0	2275.3	14.7	2900
WES-400M2-4	400	535	712.0	676.4	652.0	1491	95.9	0.89	6.5	1.3	2.0	2562.0	15.2	3000
WES-400M3-4	450	600	791.3	751.8	724.6	1489	96.0	0.90	6.5	1.5	2.0	2886.2	16.1	3150
WES-400L1-4	500	670	879.2	835.3	805.1	1492	96.0	0.90	6.5	1.3	2.0	3200.4	17.3	3300
WES-400L2-4	560	750	1006.1	955.8	921.2	1492	96.1	0.88	7.0	1.8	2.0	3584.5	18.6	3460

*** Defined by Wonder Electric Singapore**

All values of current indicated have a tolerance level of ± 3%

Efficiencies according to the indirect method of IEC 60034-2-1:2007 with stray load losses determined from measurement.

IST = Locked Rotor Current
IFL = Full Load Current
TM = Maximum Torque
TFL = Full Load Torque
TST = Locked Rotor Torque

* Data are subjected to revisions without any prior notice.

TECHNICAL SPECIFICATIONS - WES SERIES 6 POLES 50Hz IE1

Motor Type	Rated Power		Current (IFL) /A			Rated Speed	Full load Efficiency	Power Factor	IST/ IFL	TST/ TFL	TM/ TFL	TFL	Moment of Inertia J	Weight
6 Poles 50Hz	KW	HP	380V	400V	415V	r/min	%	cos ϕ	Ratio			N.M	Kgm^2	Kg
WES-80M1-6	0.37	0.5	1.30	1.23	1.19	885	62.0*	0.70	4.7	1.9	2.0	4.0	0.0016	15
WES-80M2-6	0.55	0.75	1.79	1.70	1.63	885	65.0*	0.72	4.7	1.9	2.1	5.9	0.002	16
WES-90S-6	0.75	1	2.29	2.18	2.10	915	69.0*	0.72	5.5	2.0	2.1	7.8	0.003	23
WES-90L-6	1.1	1.5	3.18	3.02	2.91	915	72.0*	0.73	5.5	2.0	2.1	11.5	0.004	25
WES-100L-6	1.5	2	4.00	3.80	3.66	920	76.0	0.75	5.5	2.0	2.1	15.6	0.0069	33
WES-112M-6	2.2	3	5.57	5.29	5.10	940	79.0	0.76	6.5	2.0	2.1	22.4	0.0071	39
WES-132S-6	3	4	7.40	7.03	6.78	960	81.0	0.76	6.5	2.1	2.1	29.8	0.0274	56
WES-132M1-6	4	5.5	9.75	9.26	8.93	960	82.0	0.76	6.5	2.1	2.1	39.8	0.0343	71
WES-132M2-6	5.5	7.5	12.92	12.27	11.83	960	84.0	0.77	6.5	2.1	2.1	54.7	0.0431	75
WES-160M-6	7.5	10	17.21	16.35	15.76	970	86.0	0.77	6.5	2.0	2.1	73.8	0.08	108
WES-160L-6	11	15	24.49	23.26	22.42	970	87.5	0.78	6.5	2.0	2.1	108.3	0.108	131
WES-180L-6	15	20	31.61	30.03	28.95	970	89.0	0.81	7.0	2.0	2.1	147.7	0.167	171
WES-200L1-6	18.5	25	38.56	36.63	35.30	975	90.0	0.81	7.0	2.1	2.1	181.2	0.302	216
WES-200L2-6	22	30	44.75	42.51	40.97	975	90.0	0.83	7.0	2.1	2.1	215.5	0.342	225
WES-225M-6	30	40	59.30	56.34	54.30	980	91.5	0.84	7.0	2.0	2.1	292.3	0.525	286
WES-250M-6	37	50	71.05	67.50	65.06	980	92.0	0.86	7.0	2.1	2.1	360.6	0.807	380
WES-280S-6	45	60	85.95	81.65	78.70	980	92.5	0.86	7.0	2.1	2.0	438.5	1.334	465
WES-280M-6	55	75	104.7	99.47	95.88	980	92.8	0.86	7.0	2.1	2.0	536.0	1.598	540
WES-315S-6	75	100	141.7	134.6	129.8	985	93.5	0.86	7.0	2.0	2.0	727.2	3.94	861
WES-315M-6	90	125	169.5	161.0	155.2	985	93.8	0.86	7.0	2.0	2.0	872.6	4.58	940
WES-315L1-6	110	150	206.7	196.4	189.3	985	94.0	0.86	6.7	2.0	2.0	1066.5	5.23	1110
WES-315L2-6	132	180	244.7	232.5	224.1	985	94.2	0.87	6.7	2.0	2.0	1279.8	5.54	1175
WES-355M1-6	160	215	292.3	277.7	267.7	990	94.5	0.88	6.7	1.9	2.0	1543.4	8.81	1620
WES-355M2-6	200	270	365.4	347.1	334.6	990	94.5	0.88	6.7	1.9	2.0	1929.3	9.63	1730
WES-355L-6	250	340	456.8	433.9	418.2	990	94.5	0.88	6.7	1.9	2.0	2411.6	10.54	1920
WES-400M1-6	315	420	577.8	549.0	529.1	992	95.2	0.87	6.5	1.4	2.0	3032.5	21.2	3410
WES-400M2-6	355	475	649.9	617.4	595.1	995	95.4	0.87	6.5	1.2	2.0	3407.3	23.5	3650
WES-400L1-6	400	535	722.4	686.3	661.5	994	95.6	0.88	6.5	1.5	2.0	3843.1	26.4	3700
WES-400L2-6	450	600	811.0	770.5	742.6	995	95.8	0.88	6.5	1.2	2.0	4319.1	28.8	3820
WES-400L3-6	500	670	900.2	855.2	824.3	994	95.9	0.88	6.5	1.6	2.0	4803.8	31.4	3970

*** Defined by Wonder Electric Singapore**

All values of current indicated have a tolerance level of ± 3%

Efficiencies according to the indirect method of IEC 60034-2-1:2007 with stray load losses determined from measurement.

IST = Locked Rotor Current
IFL = Full Load Current
TM = Maximum Torque
TFL = Full Load Torque
TST = Locked Rotor Torque

* Data are subjected to revisions without any prior notice.

TECHNICAL SPECIFICATIONS - WES SERIES 8 POLES 50Hz IE1

Motor Type	Rated Power		Current (IFL) /A			Rated Speed	Full load Efficiency	Power Factor	IST/ IFL	TST/ TFL	TM/ TFL	TFL	Moment of Inertia J	Weight
8 Poles 50Hz	KW	HP	380V	400V	415V	r/min	%	cos ϕ	Ratio			N.M	Kgm^2	Kg
WES-100L1-8	0.75	1	2.40	2.28	2.19	680	71.0*	0.67	4.0	1.8	2.0	10.5	0.0063	33
WES-100L2-8	1.1	1.5	3.32	3.15	3.04	680	73.0*	0.69	5.0	1.8	2.0	15.4	0.0097	34
WES-112M-8	1.5	2	4.40	4.18	4.03	700	75.0	0.69	5.0	1.8	2.0	20.5	0.012	39
WES-132S-8	2.2	3	6.04	5.73	5.53	710	78.0	0.71	6.0	1.8	2.0	29.6	0.029	62
WES-132M-8	3	4	7.90	7.51	7.24	710	79.0	0.73	6.0	1.8	2.0	40.4	0.038	66
WES-160M1-8	4	5.5	10.28	9.76	9.41	720	81.0	0.73	6.0	1.9	2.0	53.1	0.0649	94
WES-160M2-8	5.5	7.5	13.61	12.93	12.46	720	83.0	0.74	6.0	2.0	2.0	73.0	0.0821	106
WES-160L-8	7.5	10	17.77	16.88	16.27	720	85.5	0.75	6.0	2.0	2.0	99.5	0.1141	128
WES-180L-8	11	15	25.13	23.88	23.01	730	87.5	0.76	6.6	2.0	2.0	143.9	0.187	170
WES-200L-8	15	20	34.08	32.37	31.20	730	88.0	0.76	6.6	2.0	2.0	196.2	0.325	220
WES-225S-8	18.5	25	41.09	39.04	37.63	730	90.0	0.76	6.6	1.9	2.0	242.0	0.481	270
WES-225M-8	22	30	47.35	44.98	43.36	730	90.5	0.78	6.6	1.9	2.0	287.8	0.531	295
WES-250M-8	30	40	63.40	60.23	58.06	730	91.0	0.79	6.6	1.9	2.0	392.5	0.809	370
WES-280S-8	37	50	77.77	73.88	71.21	735	91.5	0.79	6.6	1.9	2.0	480.7	1.381	475
WES-280M-8	45	60	94.07	89.37	86.14	735	92.0	0.79	6.6	1.9	2.0	584.7	1.721	555
WES-315S-8	55	75	111.2	105.6	101.8	735	92.8	0.81	6.6	1.8	2.0	714.6	4.59	905
WES-315M-8	75	100	151.3	143.7	138.5	735	93.0	0.81	6.6	1.8	2.0	974.5	5.36	981
WES-315L1-8	90	125	177.8	168.9	162.8	735	93.8	0.82	6.6	1.8	2.0	1169.4	6.11	1070
WES-315L2-8	110	150	216.8	206.0	198.5	735	94.0	0.82	6.4	1.8	2.0	1429.3	6.55	1160
WES-355M1-8	132	180	261.0	248.0	239.0	745	93.7	0.82	6.4	1.8	2.0	1692.1	10.4	1700
WES-355M2-8	160	215	314.7	299.0	288.2	745	94.2	0.82	6.4	1.8	2.0	2051.0	11.7	1730
WES-355L-8	200	270	387.4	368.0	354.7	745	94.5	0.83	6.4	1.8	2.0	2563.8	12.8	1970
WES-400M1-8	250	335	486.6	462.2	445.5	745	95.2	0.82	6.5	1.4	2.0	3204.7	27.4	2900
WES-400M2-8	280	375	545.0	517.7	499.0	745	95.2	0.82	6.5	1.3	2.0	3589.3	28.9	3000
WES-400L1-8	315	420	590.2	560.7	540.4	746	95.4	0.85	6.5	1.3	2.0	4032.5	30.6	3100
WES-400L2-8	355	475	663.1	629.9	607.1	744	95.7	0.85	6.5	1.2	2.0	4556.8	32.4	3250
WES-400L3-8	400	535	750.2	712.7	687.0	743	95.3	0.85	6.5	1.1	2.0	5141.3	34.2	3400

*** Defined by Wonder Electric Singapore**

All values of current indicated have a tolerance level of ± 3%

Efficiencies according to the indirect method of IEC 60034-2-1:2007 with stray load losses determined from measurement.

IST = Locked Rotor Current
IFL = Full Load Current
TM = Maximum Torque
TFL = Full Load Torque
TST = Locked Rotor Torque

* Data are subjected to revisions without any prior notice.

B3 MOUNTING AND OVERALL DIMENSIONS - WES SERIES

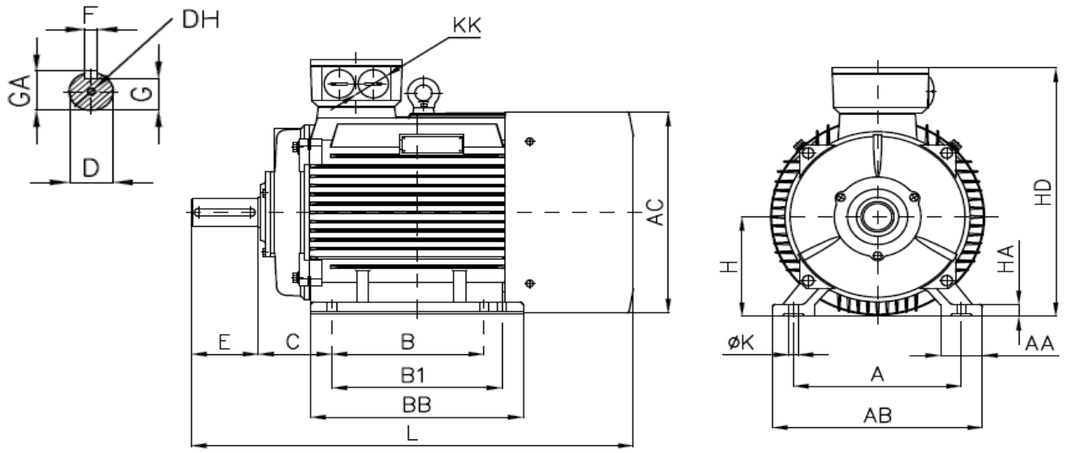

Frame Size	Poles	Mounting Dimensions (mm)												Overall Dimensions (mm)						
		A	B	C	D	E	F	G	H	K	KK	DH	GA	AA	AB	AC	HA	HD	BB	L
80	2~12	125	100	50	19	40	6	15.5	80	10	2-M20 x 1.5	M6x16	21.5	35	160	160	12	225	130	280
90S	2~12	140	100	56	24	50	8	20	90	10	2-M20 x 1.5	M8x20	27	36	180	180	12	245	140	315
90L	2~12	140	125	56	24	50	8	20	90	10	2-M20 x 1.5	M8x20	27	36	180	180	12	245	165	340
100L	2~12	160	140	63	28	60	8	24	100	12	2-M20 x 1.5	M10x28	31	40	200	200	14	280	175	375
112M	2~12	190	140	70	28	60	8	24	112	12	2-M25 x 1.5	M10x28	31	45	230	220	15	305	180	400
132S	2~12	216	140	89	38	80	10	33	132	12	2-M25 x 1.5	M12x28	41	55	265	260	18	355	190	465
132M	2~12	216	178	89	38	80	10	33	132	12	2-M25 x 1.5	M12x28	41	55	265	260	18	355	230	505
160M	2~12	254	210	108	42	110	12	37	160	15	2-M32 x 1.5	M16x36	45	65	315	315	20	425	260	608
160L	2~12	254	254	108	42	110	12	37	160	15	2-M32 x 1.5	M16x36	45	65	315	315	20	425	305	652
180M	2, 4	279	241	121	48	110	14	42.5	180	15	2-M32 x 1.5	M16x36	51.5	70	350	360	22	460	315	690
180L	4~12	279	279	121	48	110	14	42.5	180	15	2-M32 x 1.5	M16x36	51.5	70	350	360	22	460	350	730
200L	2~12	318	305	133	55	110	16	49	200	19	2-M50 x 1.5	M20x42	59	70	390	400	25	510	370	760
225S	4, 8	356	286	149	60	140	18	53	225	19	2-M50 x 1.5	M20x42	64	75	435	450	28	555	370	810
225M	2	356	311	149	55	110	16	49	225	19	2-M50 x 1.5	M20x42	59	75	435	450	28	555	395	805
225M	4~12	356	311	149	60	140	18	53	225	19	2-M50 x 1.5	M20x42	64	75	435	450	28	555	395	835
250M	2	406	349	168	60	140	18	53	250	24	2-M63 x 1.5	M20x42	64	80	485	485	30	625	445	910
250M	4~12	406	349	168	65	140	18	58	250	24	2-M63 x 1.5	M20x42	69	80	485	485	30	625	445	910
280S	2	457	368	190	65	140	18	58	280	24	2-M63 x 1.5	M20x42	69	85	545	550	35	685	490	985
280S	4~12	457	368	190	75	140	20	67.5	280	24	2-M63 x 1.5	M20x42	79.5	85	545	550	35	685	490	1005
280M	2	457	419	190	65	140	18	58	280	24	2-M63 x 1.5	M20x42	69	85	545	550	35	685	540	1030
280M	4~12	457	419	190	75	140	20	67.5	280	24	2-M63 x 1.5	M20x42	79.5	85	545	550	35	685	540	1060
315S	2	508	406	216	65	140	18	58	315	28	2-M63 x 1.5	M20x42	69	120	630	625	45	845	570	1180
315S	4~12	508	406	216	80	170	22	71	315	28	2-M63 x 1.5	M20x42	85	120	630	625	45	845	570	1210
315M,L	2	508	457	216	65	140	18	58	315	28	2-M63 x 1.5	M20x42	69	120	630	625	45	845	680	1290
315M,L	4~12	508	457	216	80	170	22	71	315	28	2-M63 x 1.5	M20x42	85	120	630	625	45	845	680	1320
355M	2	610	500	254	75	140	20	67.5	355	28	2-M72 x 2	M24x45	79.5	120	730	700	52	970	750	1526
355M	4~12	610	500	254	95	170	25	86	355	28	2-M72 x 2	M24x45	100	120	730	700	52	970	750	1556
355L	2	610	560	254	75	140	20	67.5	355	28	2-M72 x 2	M24x45	79.5	120	730	700	52	970	750	1526
355L	4~12	610	560	254	95	170	25	86	355	28	2-M72 x 2	M24x45	100	120	730	700	52	970	750	1556
400M,L	2	686	710	280	80	170	22	71	400	35	3-M72 x 2	M24x45	85	120	810	860	45	1090	1100	1850
400M,L	4~12	686	710	280	110	210	28	100	400	35	3-M72 x 2	M24x45	116	120	810	860	45	1090	1100	1925

**** The dimension of B1 only applies to frame size of 315 and 355 where B1 is 508mm (for 315M,L), 560mm (for 355M) and 630mm (for 355L).***

* Data are subjected to revisions without any prior notice.

B35 MOUNTING AND OVERALL DIMENSIONS - WES SERIES

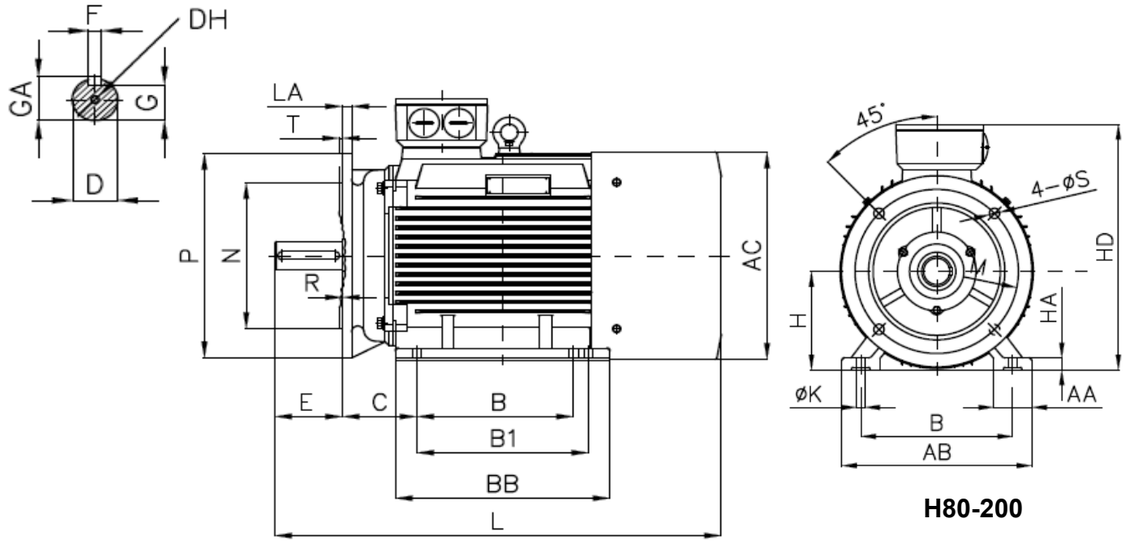

H80-200

KINDLY REFER TO THE FOLLOWING PAGE FOR FRAME SIZE OF 225 TO 400

Frame Size	Poles	Mounting Dimensions (mm)																Overall Dimensions (mm)							
		A	B	C	D	E	F	G	H	K	M	N	P	S	T	KK	DH	GA	AA	AB	AC	BB	HA	HD	LA	L
80	2~12	125	100	50	19	40	6	15.5	80	10	165	130	200	12	3.5	2-M20 x 1.5	M6x16	21.5	35	160	160	130	12	225	12	280
90S	2~12	140	100	56	24	50	8	20	90	10	165	130	200	12	3.5	2-M20 x 1.5	M8x20	27	36	180	175	140	12	245	12	315
90L	2~12	140	125	56	24	50	8	20	90	10	165	130	200	12	3.5	2-M20 x 1.5	M8x20	27	36	180	175	165	12	245	12	340
100L	2~12	160	140	63	28	60	8	24	100	12	215	180	250	15	4	2-M20 x 1.5	M10x28	31	40	200	200	175	14	280	13	375
112M	2~12	190	140	70	28	60	8	24	112	12	215	180	250	15	4	2-M25 x 1.5	M10x28	31	45	230	225	180	15	305	14	400
132S	2~12	216	140	89	38	80	10	33	132	12	265	230	300	15	4	2-M25 x 1.5	M12x28	41	55	265	260	190	18	355	14	465
132M	2~12	216	178	89	38	80	10	33	132	12	265	230	300	15	4	2-M25 x 1.5	M12x28	41	55	265	260	230	18	355	14	505
160M	2~12	254	210	108	42	110	12	37	160	15	300	250	350	19	5	2-M32 x 1.5	M16x36	45	65	315	315	260	20	425	15	608
160L	2~12	254	254	108	42	110	12	37	160	15	300	250	350	19	5	2-M32 x 1.5	M16x36	45	65	315	315	305	20	425	15	652
180M	2, 4	279	241	121	48	110	14	42.5	180	15	300	250	350	19	5	2-M32 x 1.5	M16x36	51.5	70	350	360	315	22	460	15	690
180L	4~12	279	279	121	48	110	14	42.5	180	15	300	250	350	19	5	2-M32 x 1.5	M16x36	51.5	70	350	360	350	22	460	15	730
200L	2~12	318	305	133	55	110	16	49	200	19	350	300	400	19	5	2-M50 x 1.5	M20x42	59	70	390	400	370	25	510	17	760

R= 0 (Distance from flange to shaft shoulder)

* Data are subjected to revisions without any prior notice.

B35 MOUNTING AND OVERALL DIMENSIONS - WES SERIES

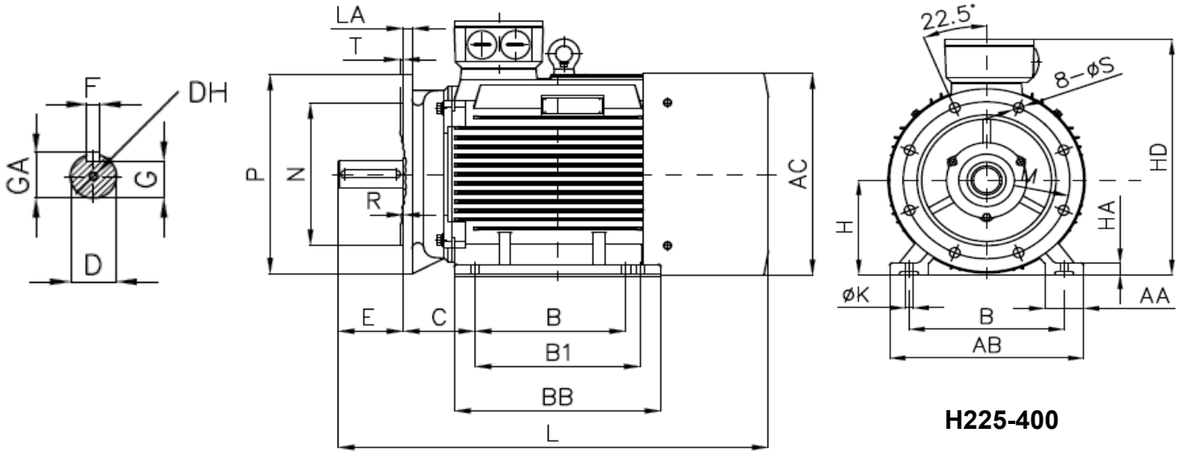

H225-400

KINDLY REFER TO THE PREVIOUS PAGE FOR FRAME SIZE OF 80 TO 200

Frame Size	Poles	Mounting Dimensions (mm)																	Overall Dimensions (mm)							
		A	B	C	D	E	F	G	H	K	M	N	P	S	T	KK	DH	GA	AA	AB	AC	BB	HA	HD	LA	L
225S	4,8	356	286	149	60	140	18	53	225	19	400	350	450	19	5	2-M50 x 1.5	M20x42	64	75	435	450	370	28	555	20	810
225M	2	356	311	149	55	110	16	49	225	19	400	350	450	19	5	2-M50 x 1.5	M20x42	59	75	435	450	395	28	555	20	805
225M	4~12	356	311	149	60	140	18	53	225	19	400	350	450	19	5	2-M50 x 1.5	M20x42	64	75	435	450	395	28	555	20	835
250M	2	406	349	168	60	140	18	53	250	24	500	450	550	19	5	2-M63 x 1.5	M20x42	64	80	485	490	445	30	625	22	910
250M	4~12	406	349	168	65	140	18	58	250	24	500	450	550	19	5	2-M63 x 1.5	M20x42	69	80	485	490	445	30	625	22	910
280S	2	457	368	190	65	140	18	58	280	24	500	450	550	19	5	2-M63 x 1.5	M20x42	69	85	545	550	490	35	685	22	985
280S	4~12	457	368	190	75	140	20	67.5	280	24	500	450	550	19	5	2-M63 x 1.5	M20x42	79.5	85	545	550	490	35	685	22	1005
280M	2	457	419	190	65	140	18	58	280	24	500	450	550	19	5	2-M63 x 1.5	M20x42	69	85	545	550	540	35	685	22	1030
280M	4~12	457	419	190	75	140	20	67.5	280	24	500	450	550	19	5	2-M63 x 1.5	M20x42	79.5	85	545	550	540	35	685	22	1060
315S	2	508	406	216	65	140	18	58	315	28	600	550	660	24	6	2-M63 x 1.5	M20x42	69	120	630	625	570	45	845	22	1180
315S	4~12	508	406	216	80	170	22	71	315	28	600	550	660	24	6	2-M63 x 1.5	M20x42	85	120	630	625	570	45	845	22	1210
315M, L	2	508	457	216	65	140	18	58	315	28	600	550	660	24	6	2-M63 x 1.5	M20x42	69	120	630	625	680	45	845	22	1290
315M, L	4~12	508	457	216	80	170	22	71	315	28	600	550	660	24	6	2-M63 x 1.5	M20x42	85	120	630	625	680	45	845	22	1320
355M	2	610	500	254	75	140	20	67.5	355	28	740	680	800	24	6	2-M72 x 2	M24x45	79.5	120	730	710	750	52	970	25	1526
355M	4~12	610	500	254	95	170	25	86	355	28	740	680	800	24	6	2-M72 x 2	M24x45	100	120	730	710	750	52	970	25	1526
355L	2	610	560	254	75	140	20	67.5	355	28	740	680	800	24	6	2-M72 x 2	M24x45	79.5	120	730	710	750	52	970	25	1526
355L	4~12	610	560	254	95	170	25	86	355	28	740	680	800	24	6	2-M72 x 2	M24x45	100	120	730	710	750	52	970	25	1526
400M, L	2	686	710	280	80	170	22	71	400	35	940	880	1000	28	6	3-M72 x 2	M24x45	85	120	810	860	1090	45	1100	25	1850
400M, L	4~12	686	710	280	110	210	28	100	400	35	940	880	1000	28	6	3-M72 x 2	M24x45	116	120	810	860	1090	45	1100	25	1925

R=0 distance from flange to shaft shoulder

*** The dimension of B1 only applies to frame size of 315 and 355 where B1 is 508mm (for 315M,L), 560mm (for 355M) and 630mm (for 355L)**

* Data are subjected to revisions without any prior notice.

B5 MOUNTING AND OVERALL DIMENSIONS - WES SERIES

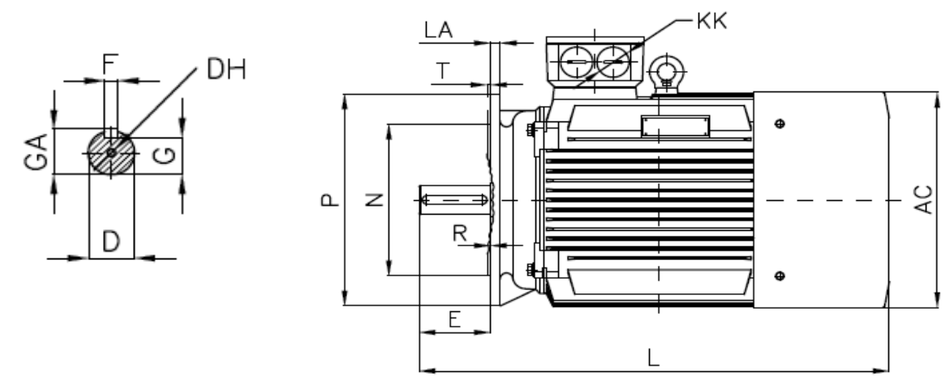

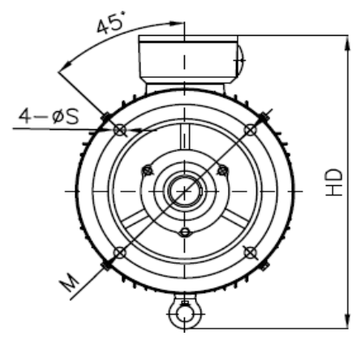

H80~200

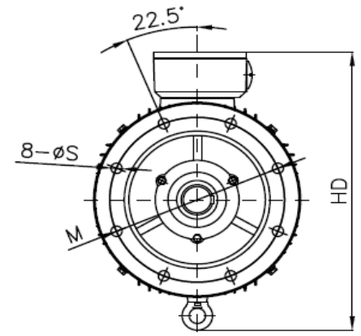

H225~280

Frame Size	Poles	Mounting Dimensions (mm)												Overall Dimensions(mm)			
		D	E	F	G	M	N	P	S	T	KK	DH	GA	AC	HD	LA	L
80	2~12	19	40	6	15.5	165	130	200	4 -Φ12	4	1-M20x1.5	M6x16	21.5	160	225	12	280
90S	2~12	24	50	8	20	165	130	200	4 -Φ12	4	1-M20x1.5	M8x20	27	180	245	12	315
90L	2~12	24	50	8	20	165	130	200	4 -Φ12	4	1-M20x1.5	M8x20	27	180	245	12	340
100L	2~12	28	60	8	24	215	180	250	4 -Φ12	4	1-M20x1.5	M10x28	31	200	280	13	375
112M	2~12	28	60	8	24	215	180	250	4 -Φ15	4	1-M25x1.5	M10x28	31	225	305	14	400
132S	2~12	38	80	10	33	265	230	300	4 -Φ15	4	1-M25x1.5	M12x28	41	260	365	14	465
132M	2~12	38	80	10	33	265	230	300	4 -Φ15	4	1-M25x1.5	M12x28	41	260	365	14	505
160M	2~12	42	110	12	37	300	250	350	4 -Φ19	5	2-M32x1.5	M16x36	45	315	445	15	608
160L	2~12	42	110	12	37	300	250	350	4 -Φ19	5	2-M32x1.5	M16x36	45	315	445	15	652
180M	2, 4	48	110	14	42.5	300	250	350	4 -Φ19	5	2-M32x1.5	M16x36	51.5	360	480	15	690
180L	2~12	48	110	14	42.5	300	250	350	4 -Φ19	5	2-M32x1.5	M16x36	51.5	360	480	15	730
200L	2~12	55	110	16	49	350	300	400	4 -Φ19	5	2-M50x1.5	M20x42	59	400	530	17	760
225S	4, 8	60	140	18	53	400	350	450	8 -Φ19	5	2-M50x1.5	M20x42	64	450	575	20	810
225M	2	55	110	16	49	400	350	450	8 -Φ19	5	2-M50x1.5	M20x42	59	450	575	20	805
225M	4~12	60	140	18	53	400	350	450	8 -Φ19	5	2-M50x1.5	M20x42	64	450	575	20	835
250M	2	60	140	18	53	500	450	550	8 -Φ19	5	2-M63x1.5	M20x42	64	490	635	22	910
250M	4~12	65	140	18	58	500	450	550	8 -Φ19	5	2-M63x1.5	M20x42	69	490	635	22	910
280S	2	65	140	18	58	500	450	550	8 -Φ19	5	2-M63x1.5	M20x42	69	550	725	22	985
280S	4~12	75	140	20	67.5	500	450	550	8 -Φ19	5	2-M63x1.5	M20x42	79.5	550	725	22	1005
280M	2	65	140	18	58	500	450	550	8 -Φ19	5	2-M63x1.5	M20x42	69	550	725	22	1030
280M	4~12	75	140	20	67.5	500	450	550	8 -Φ19	5	2-M63x1.5	M20x42	79.5	550	725	22	1060

R= 0 (Distance from flange to shaft shoulder)

* Data are subjected to revisions without any prior notice.

RANGE OF PRODUCTS

- Three phase asynchronous squirrel-cage & slip ring induction motors
- Three phase asynchronous self-braking motors
- Hollow shaft rotor motors
- Cooling tower motors
- High Efficiency motors, (IE2) (IE3)
- Explosion-proof & increased safety motors
- Anchor winch motors
- High temperature resistant motors
- Geared motors

MOTORS CAN BE CUSTOMIZED IN ACCORDANCE TO CUSTOMERS' MECHANICAL & ELECTRICAL REQUIREMENTS:

1. IP56
2. IP65
3. IP66
4. Class H Insulation
5. Multi-speed
6. Special paint finish
7. Corrosion proof
8. Special voltage/frequency (Hz)
9. PTC thermistor for heater thermal protection
10. Anti-Condensation Heater
11. Sun Canopy
12. TENV/TEAO Motors
13. Class H / High Temp Motors
14. VSD Motors
15. Double Ended Shaft

Note: The technical data in this catalogue is only for reference. Continuous development of our products entitles us to change the specification without any prior notice. If you have any queries, please feel free to contact us.

Distributor:

WONDER ELECTRIC MOTOR (S) PTE. LTD.
(GST & Co. Regn. 201219835E)
123 Pioneer Road, Singapore 639596
Tel: +65 6265 8698 Fax: +65 6265 6589
Email: wondersg@singnet.com.sg
Website: www.wonder.sg

2015 Copyright @ Wonder Electric Motor (S) Pte Ltd. All Rights Reserved